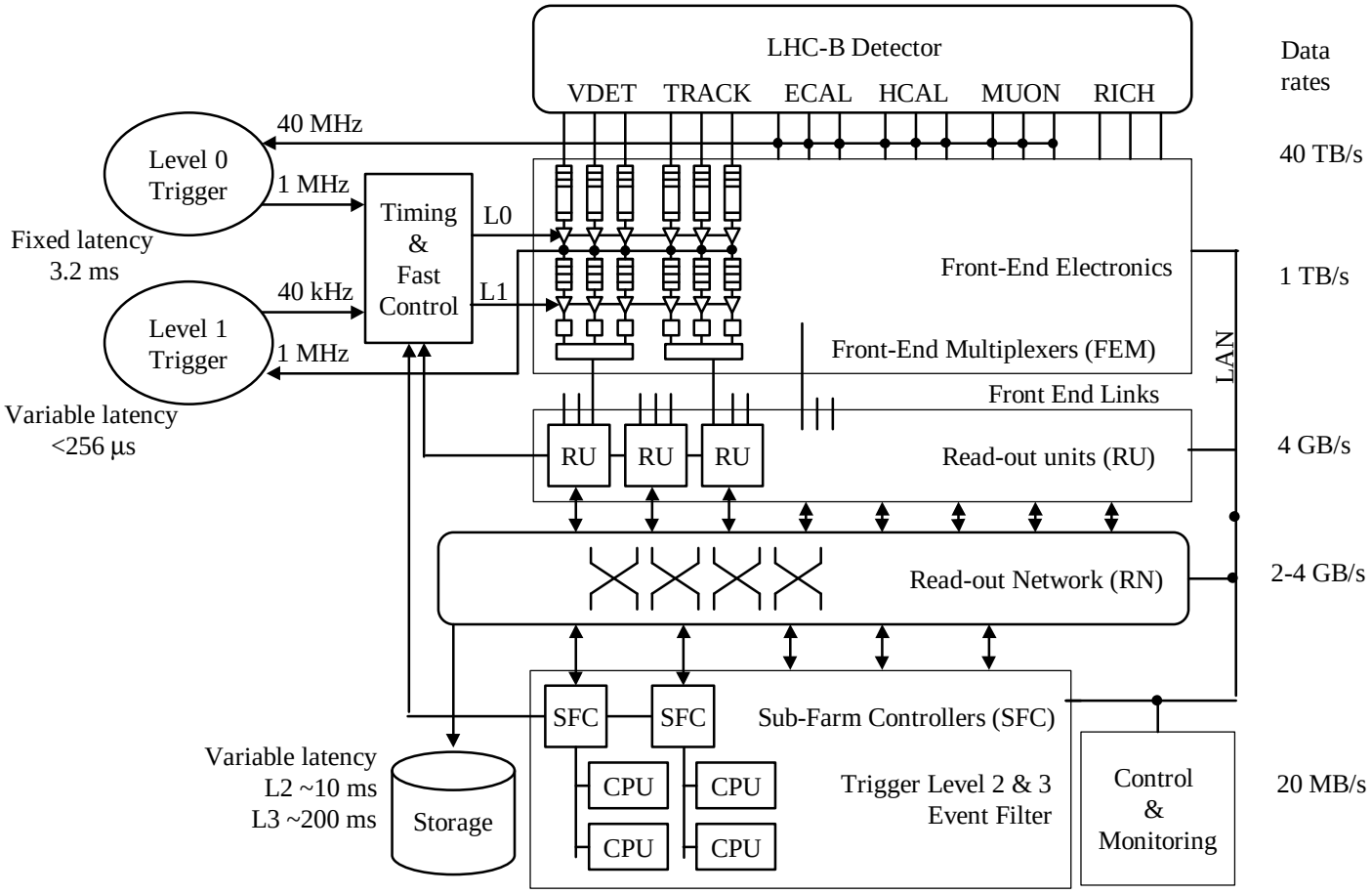
LHC-B Detector
VDET
TRACK
ECAL
HCAL
MUON
RICH
Data rates
40 MHz
40 TB/s
Level 0 Trigger
1 MHz
Timing & Fast Control
L0
L1
Fixed latency 3.2 ms
40 kHz
Level 1 Trigger
1 MHz
Variable latency <256 µs
Front-End Electronics
1 TB/s
Front-End Multiplexers (FEM)
LAN
Front End Links
RU
RU
RU
Read-out units (RU)
4 GB/s
Read-out Network (RN)
2-4 GB/s
SFC
SFC
Sub-Farm Controllers (SFC)
CPU
CPU
CPU
CPU
Trigger Level 2 & 3 Event Filter
Control & Monitoring
20 MB/s
Variable latency
L2 ~10 ms
L3 ~200 ms
Storage